Available Base Panels

Steeple Data
Overall Width = 5'-0"
Overall Length = 5'-0"
Overall Height = 31'-0"
Unit Weight = 600 lbs.

Available Standard Panels:

101

102

201

202

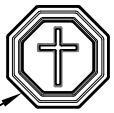

Available Premium Panels: With Krinkleglass

401

405

410

415

Krinkleglass Upgrade Available

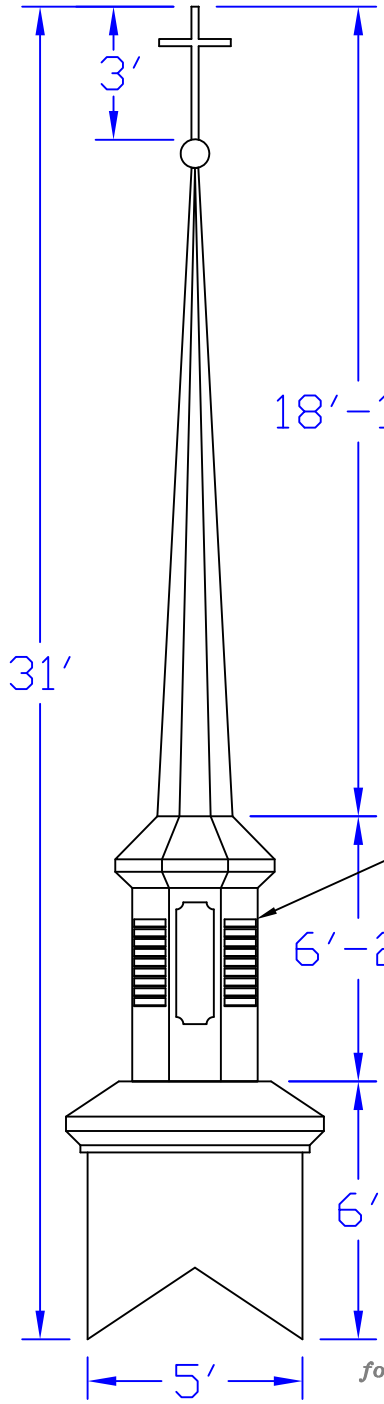

Spire panels as shown only

figure shown for scale reference

Elevation View

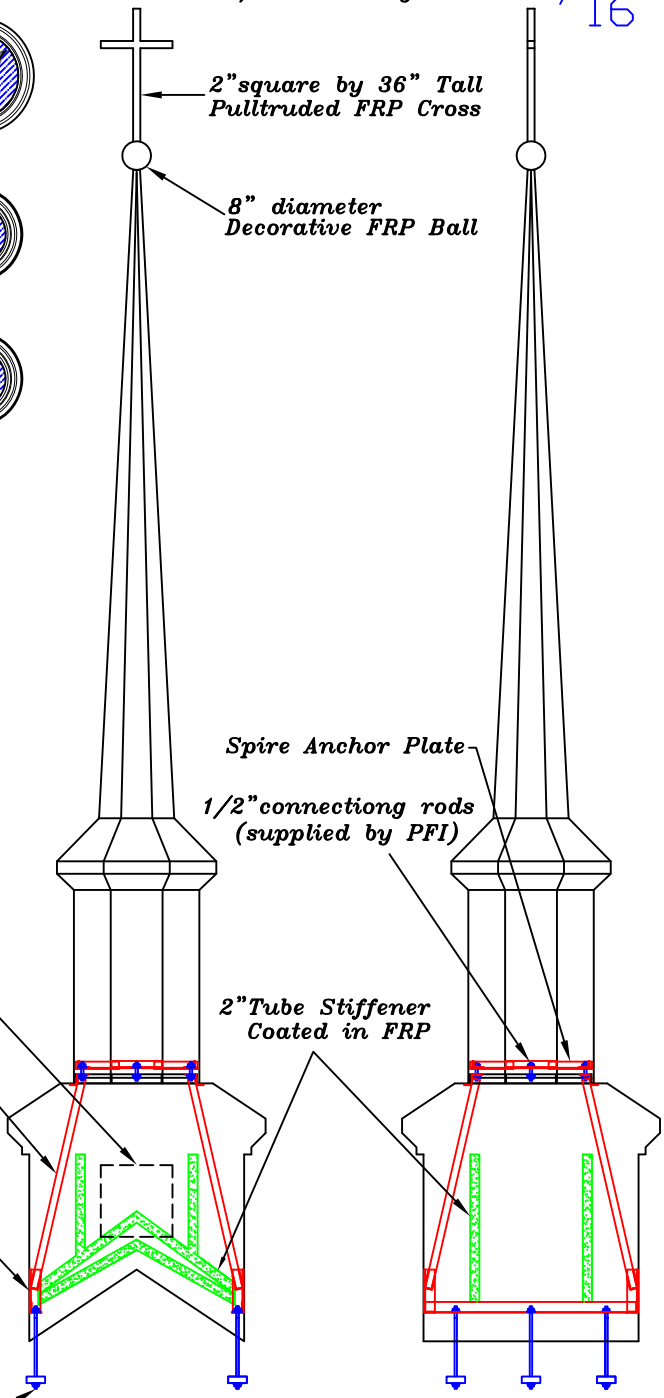

Skeleton Front/Rear View

Skeleton Side View

Note: All drawings are the property of Piedmont Fiberglass Inc. Dimensions and designs may be altered slightly to accomodate manufacturing.

Piedmont Fiberglass INCORPORATED
Old Fashioned Craftsmanship With Modern Composites Technology

P.O. Box 1089
Taylorsville, NC 28681
Phone: 828-632-8883 Fax: 828-632-5585
www.PiedmontFiberglass.com

BEACON

Model :
18-W/-BALL-AND-CROSS

Scale: SCALE
Drawn by: TJD/JEM
Created On 1/16/06
Updated On 01/16/09